Indoor Solar Simulator

Donelle Furline Jr., Hojun Kim, Daniel Kurczy, Kylee McCue, Noah Pagliaroni, Daniel White
Advisors: Professor Levendis & Professor Kowalski
Northeastern University Spring 2026

Problem & Objective

Outdoor heliostat testing in Boston is limited by severe weather variability and low winter solar availability. Goal: design and build controllable indoor solar simulator capable of replicating realistic solar motion and irradiance for heliostat testing.

Background

- Closed-Loop Heliostat and Tracking (CHAT) System: Heliostat, Solar Tracker, Beacon
- CHAT System maximizes average irradiance with solar tracker
- Heliostat focuses light at beacon to heat water

CHAT System Heliostat

Design Requirements

- Target Irradiance: 1000 W/m^2
- Spectral Range: 500 nm – 2,700 nm
- Pair with existing 3 ft tall heliostat
- 2 DOF motion (Zenith + Azimuth Angles)
- Budget Constraint: $ 1,000

Existing Solutions

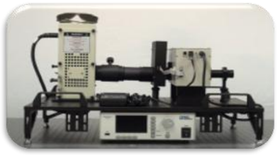

Xenon Solar Simulator

- Common PV Cell Testing
- No Mobility
- High Cost

Heliodome [2]

- Replicates Solar Radiation & Thermal Impact on Objects
- Combination of Light Sources
- Manual Input

Acknowledgements

Technical Expert: Professor DiMarzio
Coordinators: Professor Julien, Professor Smyser, Professor Abedi
CHAT System Team: James Minardi & Aura Herce-Ducini

Initial & Final Designs

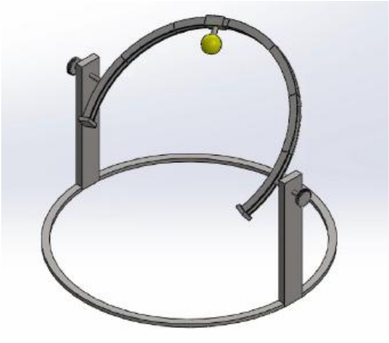

Initial Concept Design

- Movement Along a Rotating Arch
- No Base Rotation
- Spotlight Lamp Design
- Smooth Arch

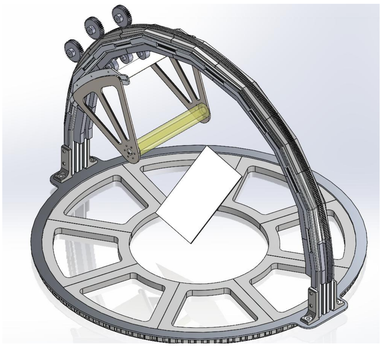

Second Major Design

- Movement Along a Fixed Arch
- Parabolic Trough Reflector
- 1500W Bulb Containment
- Gear & Guide Rail System
- Focal Point Specified

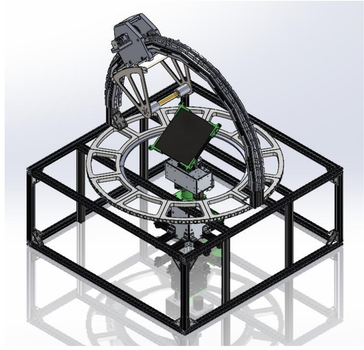

Our Final Design

- Electrical Considerations
- Focal Point Frame
- Heliostat Stand
- Azimuth & Zenith Motor Control
- Code Limited Restrictions

Mechanical System Design

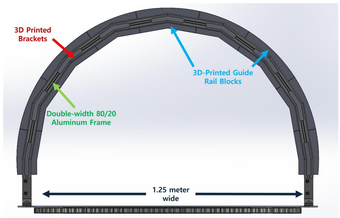

Arch Structural & Hardware Components

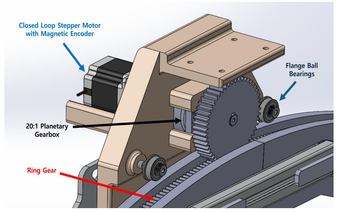

Zenith Control System Close-Up

- 3-Point Mechanical Interlock
  - 1 drive pinion and 2 rollers sandwiching the rail prevents derailment and maintains constant focal distance
- High-Torque Drivetrain
  - Maximum torque of 30N·m yields a safety factor > 10
- Closed-Loop Precision
  - Integrated magnetic encoders ensure uniform velocity during zenith motion
- Structural Integrity
  - Maximum gear bending stress of 15.26 MPa provides a safety factor > 2 for long term
- Belt-Controlled Azimuth Motion
- Trough and Light Fixture

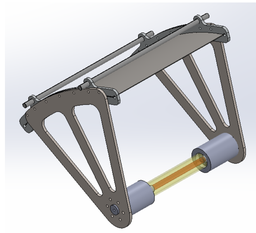

Parabolic Trough and Light Array

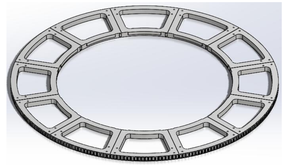

Azimuth Rotation Platform Close-Up

References

[1] American Gear Manufacturers Association, Fundamental Rating Factors and Calculation Methods for Involute Spur and Helical Gear Teeth, ANSI/AGMA 2001-D04, Alexandria, VA, USA, 2004.
[2] R. E. Sánchez-García, R. Salmón-Folgueras, O. Castilleja-Escobedo, and J. L. López-Salinas, "A novel experimental device for solar radiation simulation: Design and evaluation," *Results in Engineering*, vol. 26, Jun. 2025, doi: 10.1016/j.rineng.2025.105207.
[3] I. Reda and A. Andreas, "Solar Position Algorithm for Solar Radiation Applications (Revised)," 2000. [Online]. Available: http://www.osti.gov/bridge

Thermal Analysis

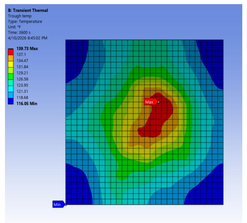

Thermal Transient Trough Temp. Map

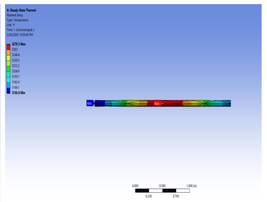

Thermal Steady-State Filament Temp. Map

- Simulated in Ansys Thermal Desktop
- Borosilicate Glass Tube Bulb Enclosure used for heat dissipation
- Digital Thermocouple Testing: Peak Tube Temp. at 255°F After Exposure to 60V for 9 minutes

Optics Testing

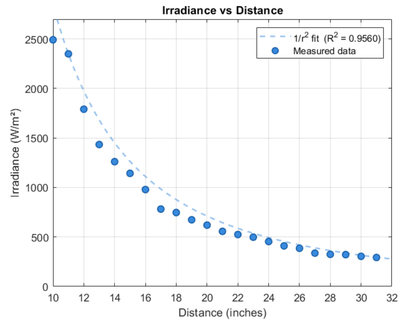

- 1500W (41200 lumens) Tungsten Halogen bulb operates as system's artificial sun
- Using Zemax (optics simulation software), an ideal parabolic trough was chosen to collimate light
- Pyranometer testing determined an irradiance of 1000 W/m^2 past focal point (~460mm)
- Spectroscopy: Between 600-2700nm at higher irradiance
- Equation for trough curvature: $y = \frac{x^2}{4f}$

  (f is distance to focal point)

Electrical & Code

- Software uses NREL SPA algorithm [3] to feed Boston sun position data
- Motors use this data to operate carriage along the guide track
- 3 Power Supplies and 120V Variac operate entire system